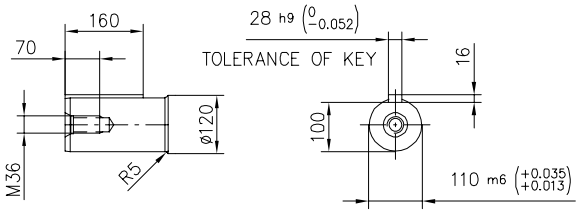

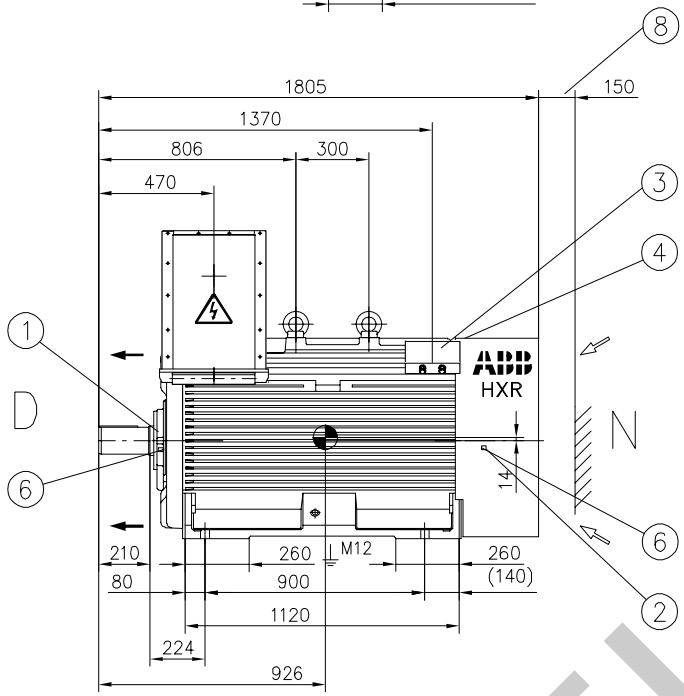

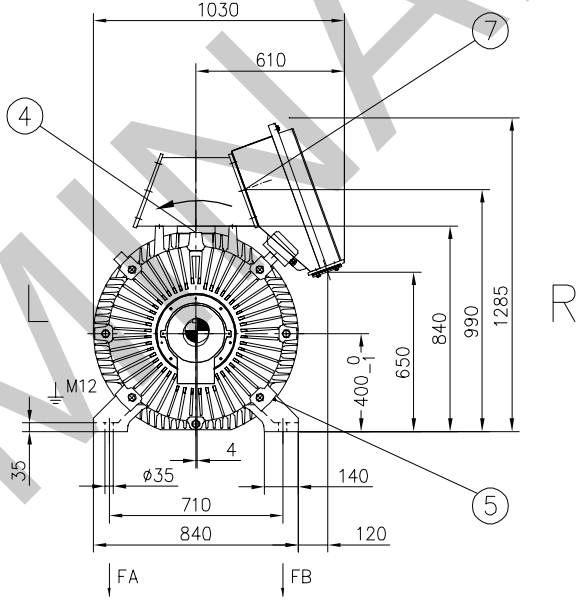

1	AXIALLY LOCATING BEARING 6324/C3
2	INSULATED SHIELD AXIALLY FREE BEARING 6319M/C3
3	TERMINAL BOX FOR ACCESSORIES CABLE ø11–ø14, 2*M20X1.5
4	GREASING NIPPLE DE AND NDE
5	SPM NIPPLE DE AND NDE
6	PT100, BEARING
7	MAIN TERMINAL BOX BLIND FLANGE 10X330X126
8	FREE DISTANCE FOR COOLING

NOTE! USE GREASE SUITABLE FOR THE WHOLE TEMPERATURE RANGE:
KLUBER KLUBERPLEX BEM 41–132

FORCES ON BASE:
STATIC: FA=FB=14.2 kN
NOMINAL LOADING: FA=FB=14.2±4 kN
2-PHASE SHORTCIRCUIT: FA=FB=14.2±45.8 kN

DIRECTION OF ROTATION LOOKING AT DE SHAFT EXTENSION.

DURING THE INITIAL INSTALLATION PLACE 2 mm SHIMS UNDER THE FEET OF THE MOTOR.
THE CUSTOMER IS RESPONSIBLE FOR THE DESIGN AND CONSTRUCTION OF THE FOUNDATION.
IT SHALL BE SUFFICIENTLY RIGID TO WITHSTAND SHORT CIRCUIT FORCES. TO AVOID RESONANCE VIBRATIONS THE FOUNDATION SHALL BE DESIGNED SO THAT THE NATURAL FREQUENCY OF FOUNDATION TOGETHER WITH MACHINE IS NOT WITHIN ±20% OF RUNNING SPEED FREQUENCY.
THE CUSTOMER IS ALSO RESPONSIBLE FOR LATERAL AND TORSIONAL CRITICAL SPEED ANALYSIS OF THE COMPLETE INSTALLATION.

We reserve all rights in this document and in the information contained therein. Reproduction, use or disclosure to third parties without express authority is strictly forbidden.
© ABB ELECTRICAL MACHINES LTD.

Symbols for roughness according to ISO 1302, 9ADA 431

General tolerances for linear and angular dimensions and geometrical tolerances: ISO 2768 –mK
Referential standards 9ADA 422, DIN 7168T.1

Customer Reference: Powen Posco 250;450: HXR	Our Reference: 7218IX201	Protection/Cooling: IP55/IC411	
Additional Information			Poles: 4
Prepared: 2014-10-15 LING CHEN	Separate part list ☐ with separate No. ☐	Title: SQUIRREL CAGE MOTOR	Scale: 1:15
Reviewed: 2014-10-15 HC	Responsible Department		
Approved: 2014-10-15 AW	Original Dwg		Language: en
Distribution: 14 / Functional Code: AH	Order No. / Weight: 2900 kg	Type: HXR 400LD4 / Mounting: IM 1001	Size: A2
ABB ELECTRICAL MACHINES LTD.		Document No.: 3GYB3833735 / Revision: A	Sheet: 1/1

ABBA2BFI AutoCAD

PRELIMINARY