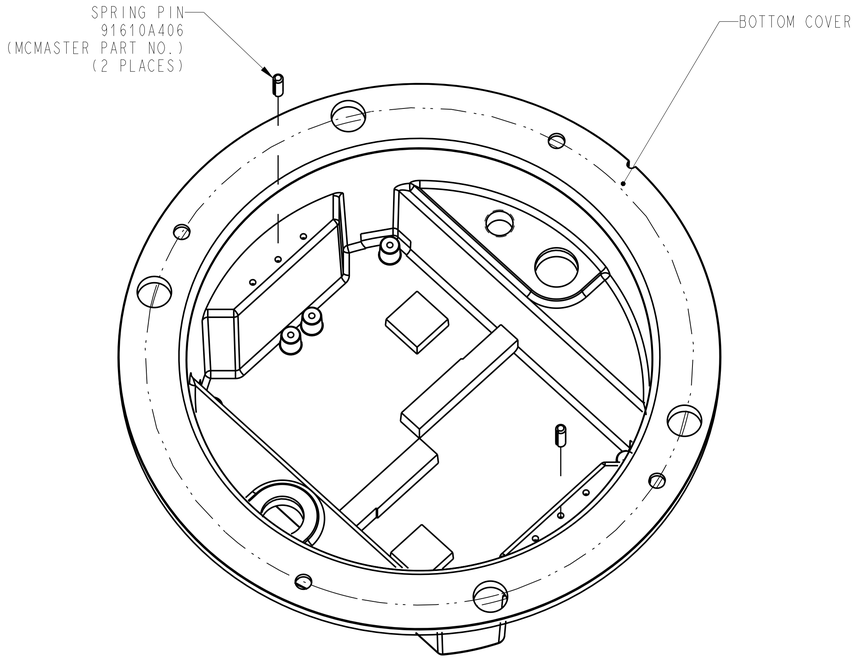

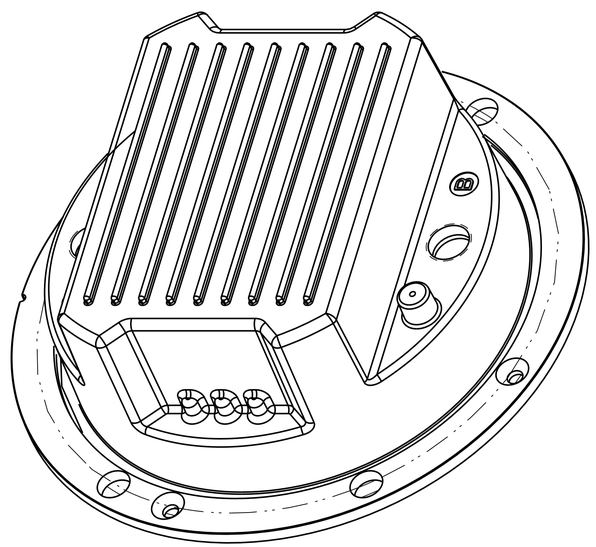

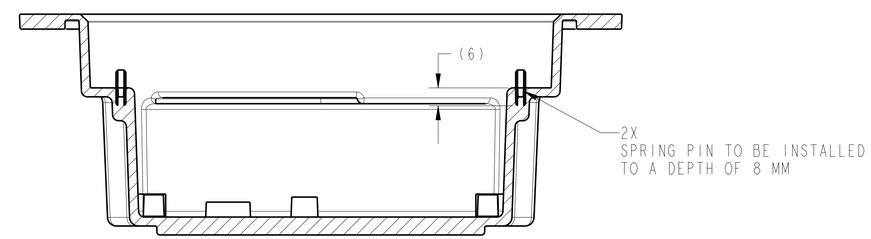

BOTTOM COVER ASSEMBLY

NOTES:
1. MATERIAL -DIE CASTING ALUMINUM ALLOY A380
2. MISSING DIMENSIONS TO BE REFERRED FROM 3D MODEL
3. SURFACE FINISH SHOULD BE 3.2 MICROMETER
4. DEPTH OF ENGRAVING TO BE 0.3MM.
5. COMPONENT TO BE FREE OF BURRS, FLASHES, SCRATCHES AND SHARP EDGES
6. ALL DRILLING AND TAPPING TO BE CARRIED OUT POST DIE-CASTING
7. COMPONENT TO BE BLACK ANODIZED TO A MINIMUM THICKNESS OF 15 MICRONS

REV.	DATE	E.O.	REV.	DATE	E.O.	REV.	DATE	E.O.
-	-	-						

DIMENSIONS & TOLERANCES PER ANSI Y14.5M-1994 & ECC ENGINEERING STANDARDS

MAT'L SEE NOTE
MAT'L SPEC. ( )
OR ( )

FUNCTIONAL DIMENSIONING:
ALL DIMENSIONED AND UNDIMENSIONED GEOMETRY AND TOLERANCING ON THIS DRAWING IS DEFINED AND CONTROLLED BY THE DATABASE FILE, KEY INFORMATION IS REPRESENTED BY THIS DRAWING CONTAINING FUNCTIONAL DIMENSIONS.
CONTROLLED BY DATABASE FILE:
HAB-45001508.PRT

FIRST USED ON SMART LIGHT POC 4
DIMENSIONS ARE IN: ☐ INCHES ☒ MILLIMETERS
THIRD ANGLE PROJECTION
DRAFT CALLOUTS
INDICATES DECREASING DIMENSION
INDICATES INCREASING DIMENSION
-TOLERANCE UNLESS NOTED-
MACHINED ±5° FORMED ±5°

MILLIMETERS			INCHES	
OVER	INCLUDING			
0	TO 6	±0.1	.0	±.02
6	TO 30	±0.2	.00	±.01
30	TO 100	±0.3	.000	±.010
100	TO 300	±0.5		
300	TO 1000	±0.8		

DWN. ATC 05-17-18
DES.
NEXT ASS'Y
REFERENCE
DEV NO.
HONEYWELL CONFIDENTIAL AND PROPRIETARY
SIZE D

Honeywell
Honeywell Technology Solutions
Bangalore 560076, INDIA

NAME BOTTOM COVER-POC-4 DIE CASTING
DRAWING NO. HAB-45001508 REV. 1
SCALE 1.000 Sheet 1 of 3

DOC. FORMAT 11-98
PRO-E REV19
ARCHIVE REF. NO.

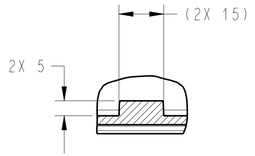

SECTION M-M
(2 PLACES)

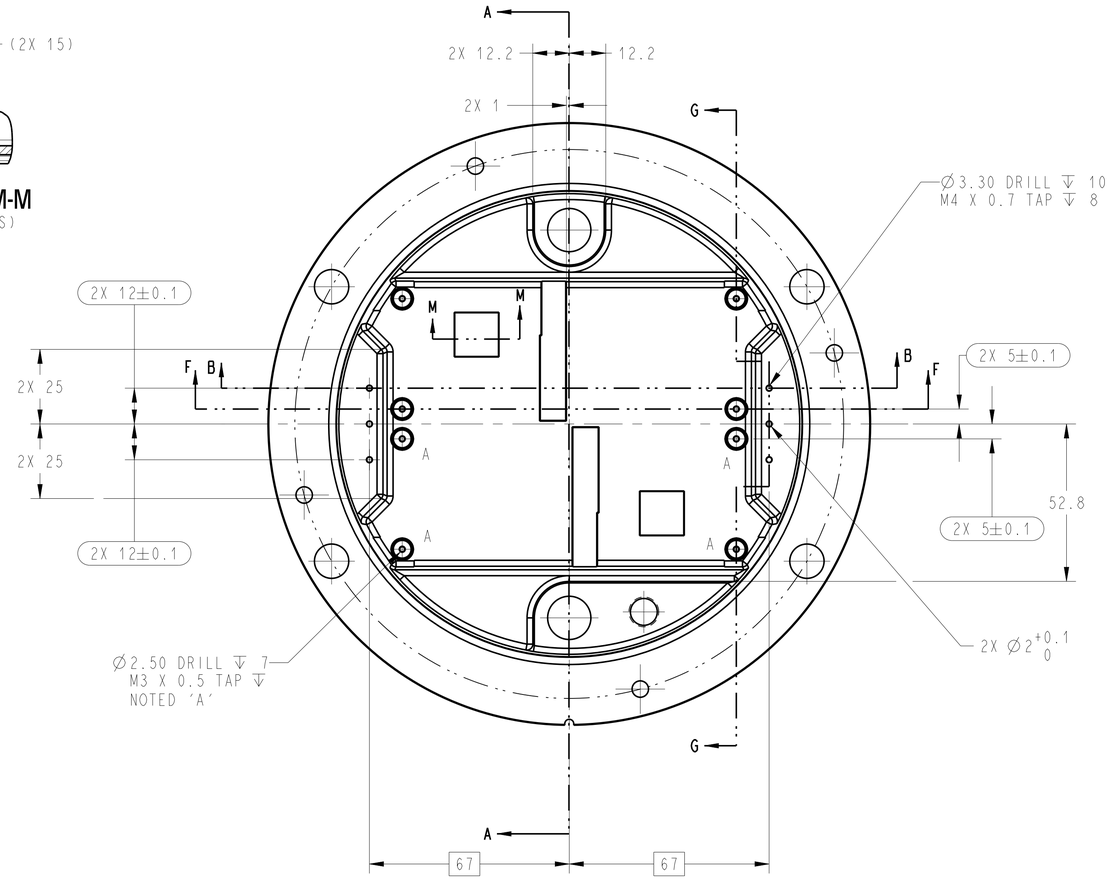

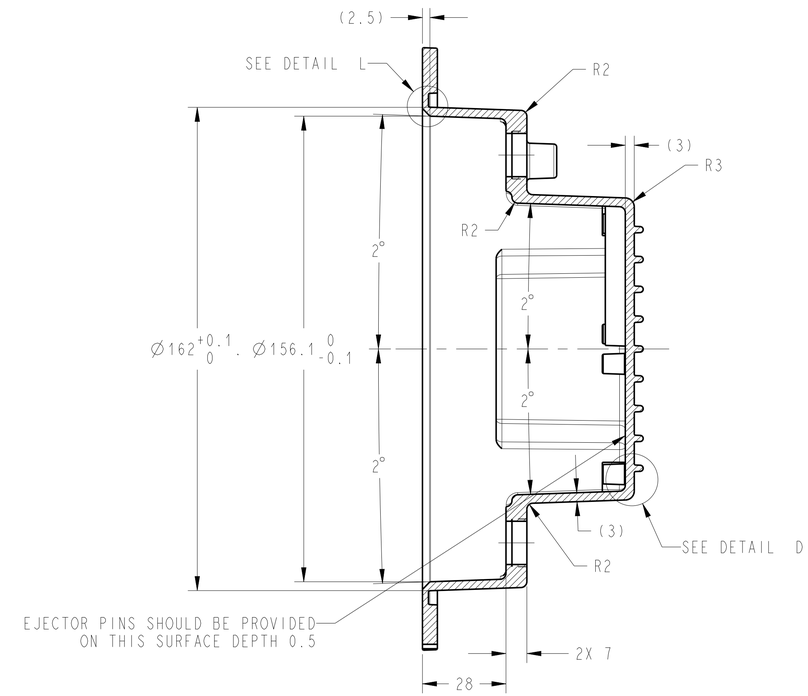

SECTION A-A

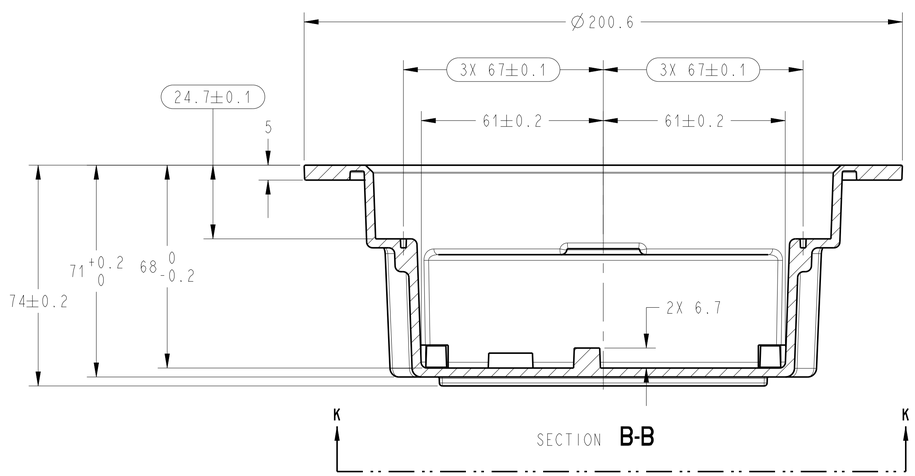

SECTION B-B

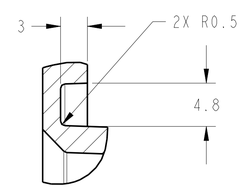

DETAIL L
SCALE 3.000

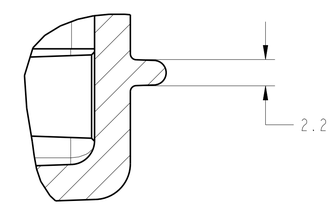

DETAIL D
SCALE 4.000

BOTTOM COVER

REV.	DATE	E.O.	REV.	DATE	E.O.	REV.	DATE	E.O.
-	-	-						

DWN. ATC 05-17-18
DES.
SIZE D
DRAWING NO. HAB-45001508
REV. 1
SCALE 1.000
SHT 2 OF 3

DOC. FORMAT 11-98
PRO-E REV19
ARCHIVE REF. NO.

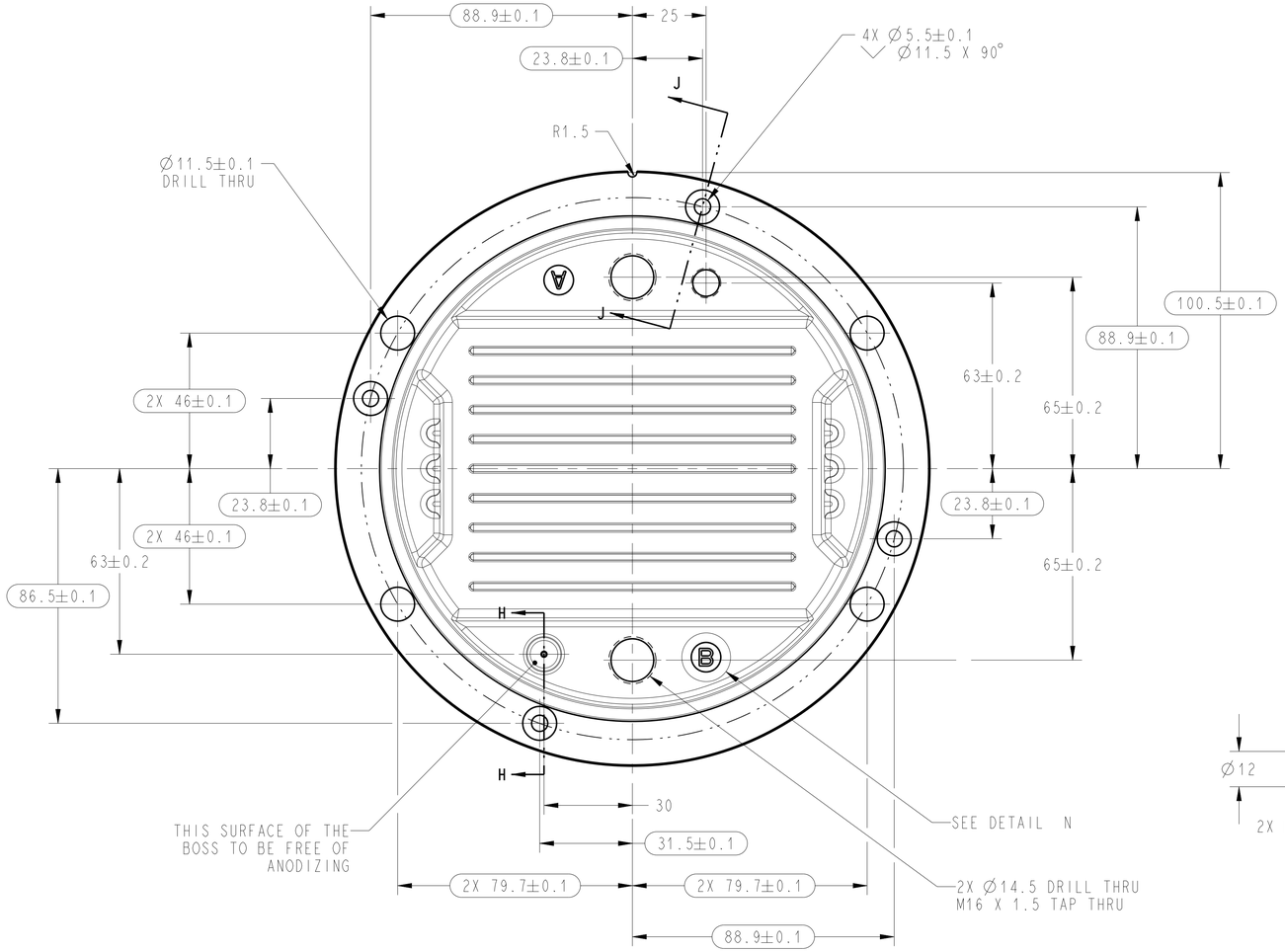

VIEW **K-K**

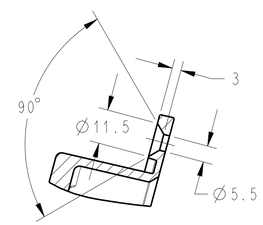

SECTION **J-J**
(TYP 4 PLACES)

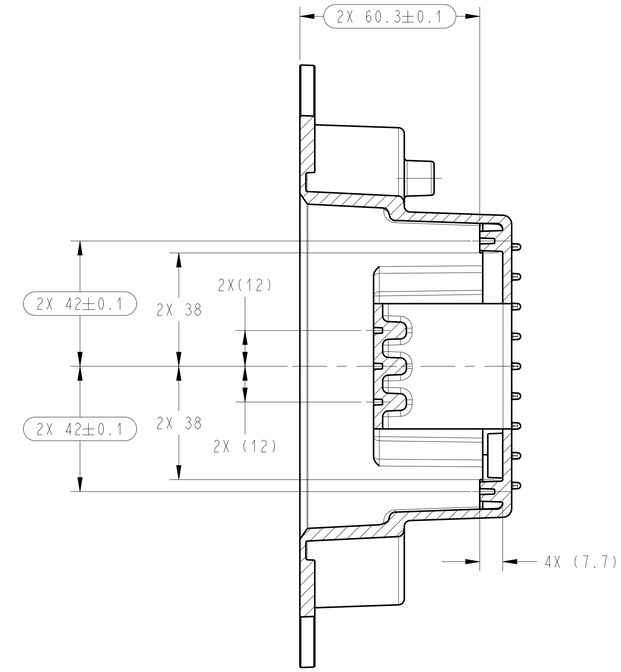

SECTION **G-G**
(TYP 2 PLACES)

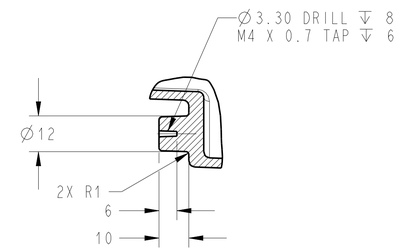

SECTION **H-H**

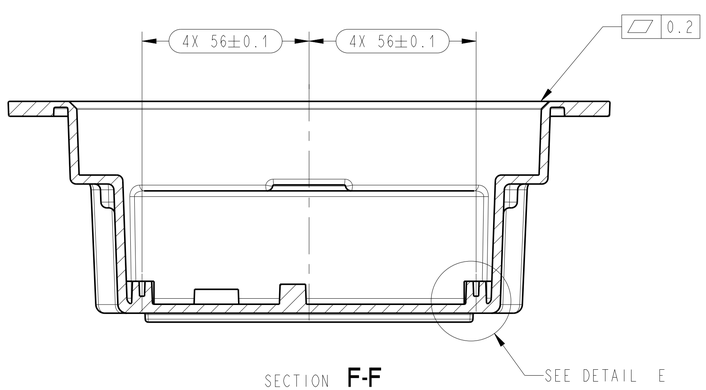

SECTION **F-F**
(TYP 4 PLACES)

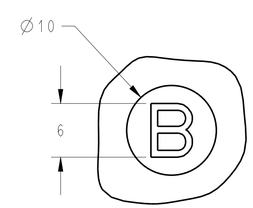

DETAIL **N**
SCALE 3.000
(TYP 2 PLACES)

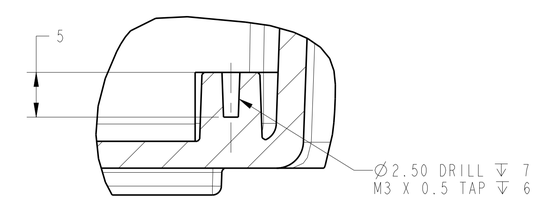

DETAIL **E**
SCALE 3.000
(TYP 8 PLACES)

REV.	DATE	E.O.	REV.	DATE	E.O.	REV.	DATE	E.O.
-	-	-						

DWN. ATC 05-17-18
DES.
SIZE D
DRAWING NO. HAB-45001508
REV. 1
SCALE 1.000
SHT 3 OF 3

DOC. FORMAT 11-98
PRO-E REV19
ARCHIVE REF. NO.