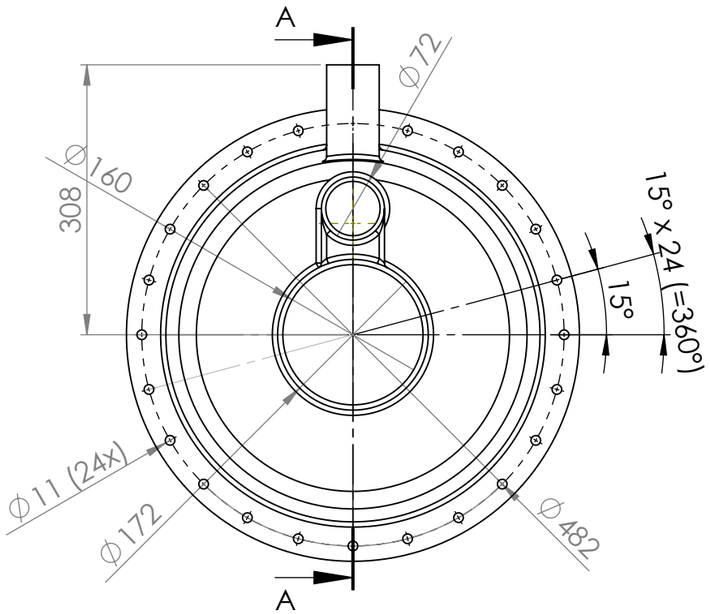

SECTIONA-A (1 : 7)

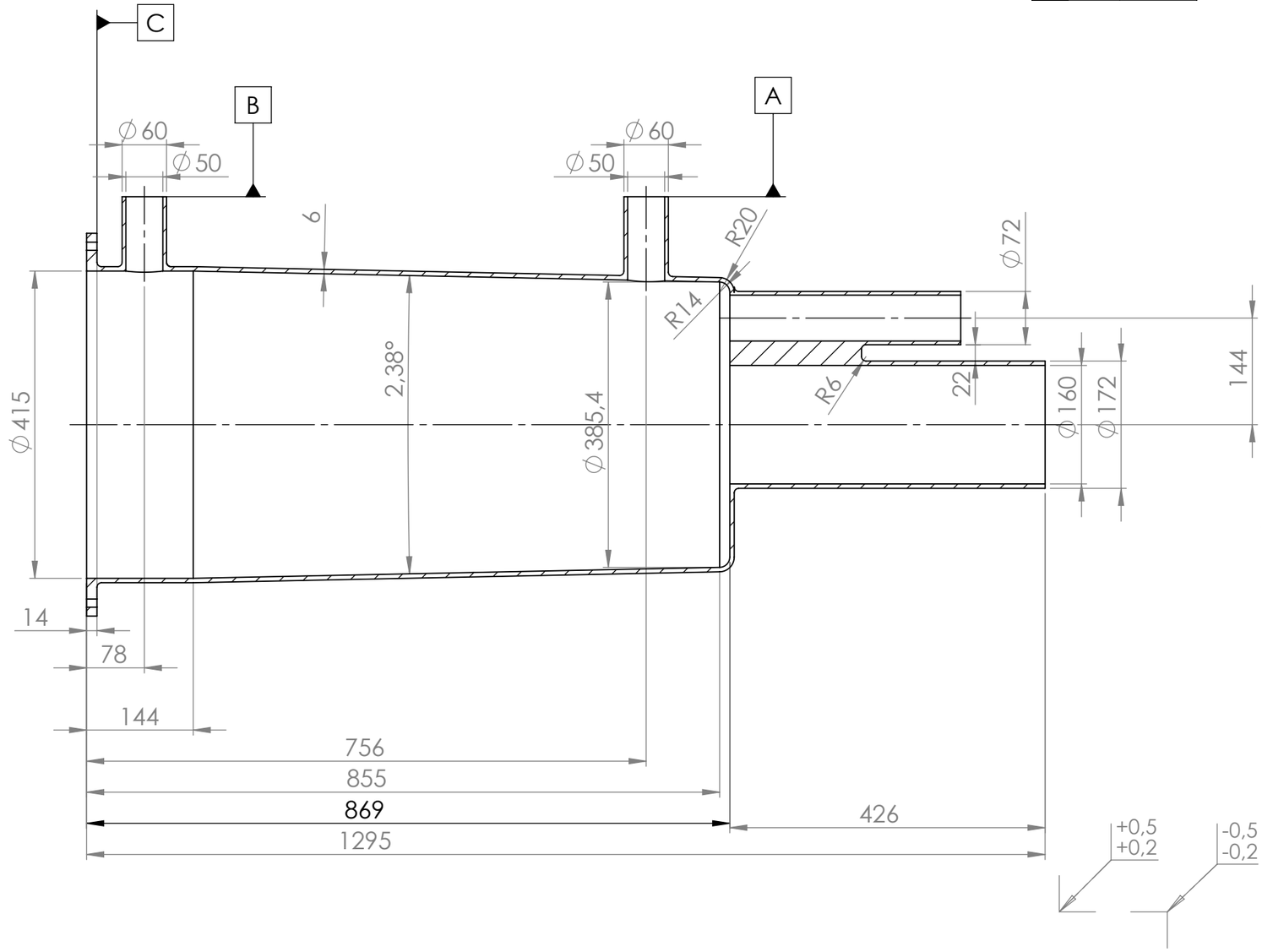

—	0,1	A - B
⊥	0,1	A - C

Protection notice:
Any dissemination only with documented confirmation of the originator Refer to protection notice ISO 16016

Surface:

Material: GFK

	Name	Signature	Date
Drawn	Schoenstein		2021-04-21
Check.	Kraus		
Appr.			

Index	changed from/at
A= diameter; length	Schoenstein/ 14.09.2021
B= more screw holes	Schoenstein/ 14.11.2022
C= diameter; length	Schoenstein/ 18.09.2023
D=	

Tol: DIN ISO 2768-m

Weight (kg): 9.86 kg

Title: Coffin Box 420kV right

Drawing Number: 3400102-03

SAP Number:

A3

Scale: 1:7

Sheet 1 of 1